AC AXIAL FANS

Size 3.15(80), 3.6(92)

AIR PERFORMANCE AND OUT LINE DRAWING : inch(mm)

3.15 x 1 (80 x 25) Venus series

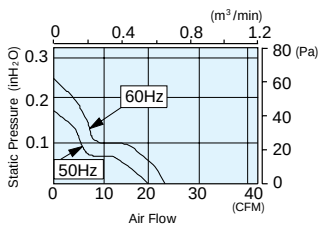

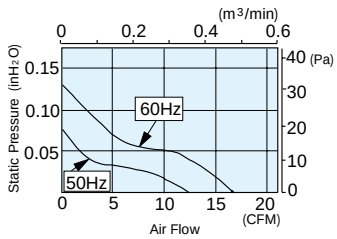

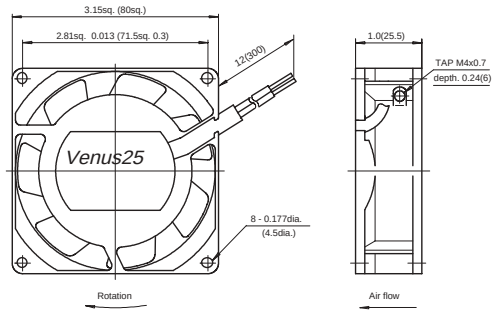

3.62 x 1 (92 x 25) Koala25 series

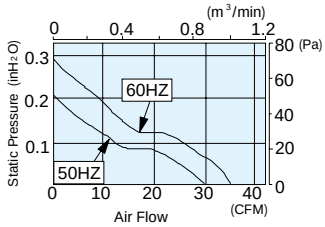

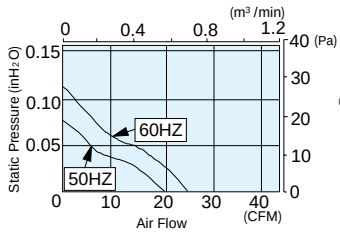

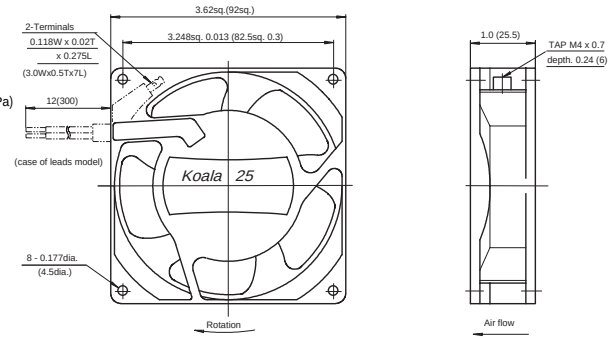

3.62 x 1.5 (92 x 38) Koala series

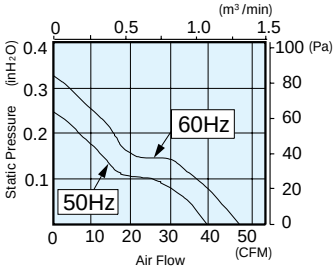

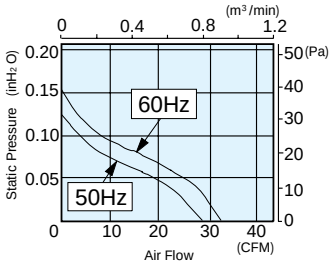

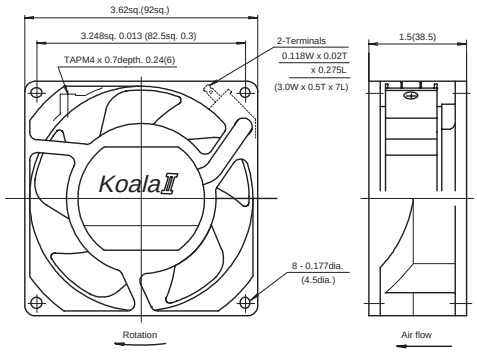

SPECIFICATIONS

Series	Max. air flow m³/min	Max. air flow CFM	Max. static pressure Pa	Max. static pressure mmH₂O	Max. static pressure inH₂O	Noise dB(A)	Rotation Spd. r/min	Voltage V(±10%)	Frequency Hz	Input W	Current mA	Rotor locked mA	Model code (Leads)	*1	safty std. *2
3.15 x 1 (80 x 25)	0.55/ 0.65	19/ 23	42/ 60	4.3/ 6.1	0.17/ 0.24	30 / 35	2750 / 3300	100	50 / 60	7 / 6	130 / 110	130 / 110	VE55B5	L	U
								200		11 / 8.5	80 / 70	80 / 75	VE60B5	L	U
								115		11 / 9	170 / 130	170 / 130	VE2B5	L	U
								208 - 230		11 / 10	70 / 60	75 / 65	VE52B5	L	U
								115	50 / 60	11 / 9	140 / 110	140 / 110	VE115B5	L	UTV
								220 / 230		9 / 8	70 / 60	75 / 65	VE50B5	L	UTV
	0.37/ 0.48	13/ 17	17/ 29	1.7/ 3.0	0.07/ 0.12	27 / 31	1800 / 2300	100 - 120	50 / 60	12 / 10	130 / 110	130 / 110	VE47F5	L	TV
								200 - 240		12 / 10	70 / 60	70 / 60	VE48F5	L	TV
3.6 x 1 (92 x 25)	0.85/ 1.0	30/ 35	49/ 67	5.0/ 6.8	0.20/ 0.27	35 / 40	2700 / 3200	100	50 / 60	11 / 9	130 / 110	140 / 130	WE55B3	T	UC
								100		11 / 9	130 / 110	140 / 130	WE55B5	L	UC
								200		12 / 10	70 / 60	80 / 75	WE60B3	T	UC
								115		11 / 9	120 / 100	140 / 120	WE2B3	T	UC
								208 - 230		11 / 10	70 / 60	75 / 70	WE52B3	T	UC
	0.85/ 1.0	30/ 35	49/ 67	5.0/ 6.8	0.20/ 0.27	35 / 40	2700 / 3200	115	50 / 60	10 / 8	140 / 110	150 / 120	WE115B5	L	UTV
			52/ 74	5.3/ 7.5	0.21/ 0.30			220 / 230		11 / 10	80 / 70	90 / 80	WE50B5	L	UTV
	0.55/ 0.68	19/ 24	19 / 27	1.9 / 2.8	0.07 /0.11	25 / 30	1750 / 2300	100 - 120	50 / 60	12 / 11	120 / 110	120 / 110	WE47F3	T	U
								100 - 120		12 / 11	120 / 110	120 / 110	WE47F5	L	UTV
								200 - 240		12 / 10	80 / 60	80 / 60	WE48F3	T	U
3.6 x1.5(92 x 38)	1.1/ 1.3	39/ 46	62/ 80	6.3/ 8.2	0.25/ 0.32	31 / 38	2850 / 3300	100	50 / 60	8.5 / 8	200 / 160	200 / 160	KA55B3	T	U
								200			100 / 70	100 / 75	KA60B3	T	U
								115			180 / 150	180 / 150	KA2B3	T	U
								208 - 230			90 / 70	90 / 70	KA52B3	T	U
	0.8/ 0.9	28/ 32	29/ 36	3.0/ 3.7	0.12/ 0.15	26 / 28	2250 / 2650	100 - 120	50 / 60	8 / 7	180 / 150	180 / 150	KA47D3	T	U
								200 - 240			90 / 170	90 / 70	KA48D3	T	U

*1 Inlet power connection as L ; Lead wire type , T ; Terminals type
*2 Safty standerd approuval as U ; UL , C ; CSA , T ; TUV , V ; VDE