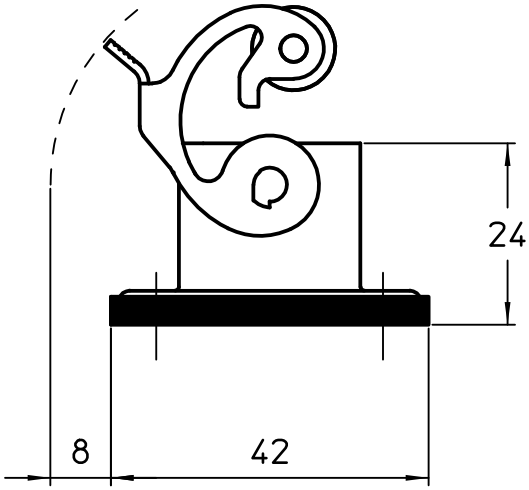

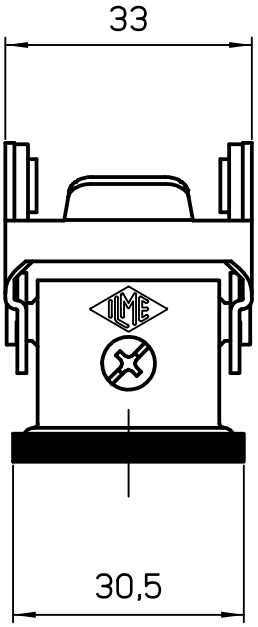

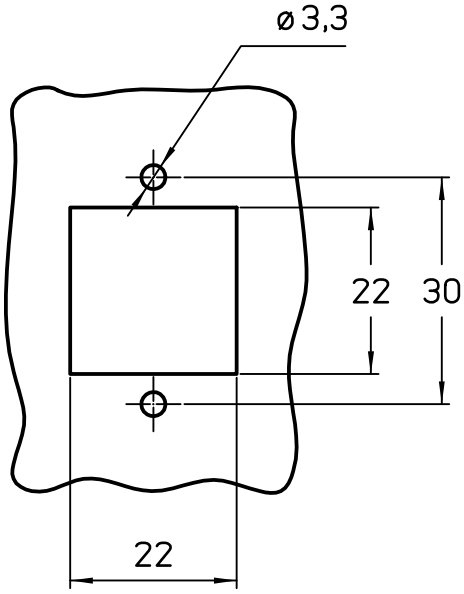

Panel cut out

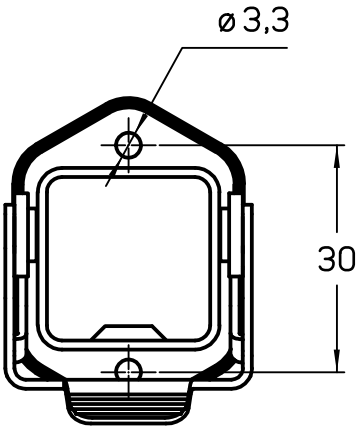

Diritti riservati All rights reserved

dimensions in mm	CKAX 03 I	Scale
Date 20/10/08	metal bulkhead housing steel 1 lev.	1:1
Sign. T.Tedeschi		